SINAG 2U CUBESATELLITE STANDARD DESIGN REQUIREMENT FOR THE DEVELOPMENT OF CAD AND EDA

Document ID: IAU-SNG-SSDR-001 Version: A
January 2026

Copyright 2026 by SINAG.

Can be used for other projects to practice design standards.

STRUCTURE AND MECHANISM TEAM

Francis Mike John Camogao

Kobe Brylle Macadine

Client ...

AUTHORS/PREPARED BY

This page intentionally left blank

DISTRIBUTION AND LICENSE

This document is released under an **Open Access License**.

Permission is hereby granted, free of charge, to any person, educational institution, or organization to obtain a copy of this document and associated documentation files (the "Standards"), to deal in the Standards without restriction, including without limitation the rights to use, copy, modify, merge, publish, and distribute copies of the Standards, subject to the following conditions:

1. **Attribution:** The above copyright notice and this permission notice shall be included in all copies or substantial portions of the Standards. Any derivative works, research papers, or project documentation utilizing these standards must explicitly cite the original author and institution.

2. **Citation Format:**

Structure and Mechanism Team, SINAG *Standard Design Requirements (IAU-SNG-SSDR-001)*. Spacecraft Platform & Ground Systems Division, Indiana Aerospace University.

DISCLAIMER OF WARRANTY

THIS DOCUMENT AND THE STANDARDS CONTAINED HEREIN ARE PROVIDED "AS IS", WITHOUT WARRANTY OF ANY KIND, EXPRESS OR IMPLIED, INCLUDING BUT NOT LIMITED TO THE WARRANTIES OF MERCHANTABILITY, FITNESS FOR A PARTICULAR PURPOSE AND NONINFRINGEMENT.

IN NO EVENT SHALL THE AUTHORS, THE INDIANA AEROSPACE UNIVERSITY, OR THE SINAG PROJECT TEAM BE LIABLE FOR ANY CLAIM, DAMAGES, MISSION FAILURE, OR OTHER LIABILITY, WHETHER IN AN ACTION OF CONTRACT, TORT OR OTHERWISE, ARISING FROM, OUT OF OR IN CONNECTION WITH THESE STANDARDS OR THE USE OR OTHER DEALINGS IN THE STANDARDS.

TABLE OF CONTENTS

1. INTRODUCTION 6
    1.1 Purpose and Scope 6
    1.2 Core Philosophy 6
2. REFERENCED DOCUMENTS 7
3. GENERAL DESIGN 8
    3.1 Reliability and Portability 8
    3.2 Maintainability and Testability 8
    3.3 Reusability and Extensibility 8
4. VISUAL FORMATTING STANDARDS 9
    4.1 Columnar Alignment (Strict) 9
    4.2 Naming Conventions 10
5. CODING STANDARD (FRAMEWORK) 12
    5.1 Memory Management (The "Anti-Fragmentation" Rule) .. 12
    5.2 Recursion (NASA Power of Ten Rule 1) 13
    5.3 Concurrency & Interrupt Service Routines (ISRs) 14
6. ROBUSTNESS & DEFENSIVE CODING 15
    6.1 Bounded Loops (Watchdog Pattern) 15
    6.2 Floating Point Safety 15
7. GROUND STATION STANDARDS (PYTHON) 16
    7.1 Concurrency & I/O (Threading) 16
    7.2 Data Logging (The "Black Box") 16
    7.3 Formatting (Configuration Blocks) 17
    7.4 Virtual Environments 17
8. CHECKLISTS 18

Table 1. Change Log

Revision ID	Document Date	Change Authority	Affected Paragraphs	Comments
001 v.A	Dec 2025	F. Camogao	All	Original

1 INTRODUCTION

This document establishes the foundational framework and technical directives for all **Computer-Aided Design (CAD)** and **Electronic Design Automation (EDA)** activities. The primary objectives are **Compatibility** and **Uniformity**. Adherence to these standards ensures the development of maintainable, high-fidelity models. By eliminating spatial interference and alignment errors, we mitigate the risk of development delays and increased costs. This document serves as the authoritative reference for all design phases, ensuring a seamless transition from digital modeling to physical deployment.

To maintain technical consistency, the following software suites are mandated for the development of electronics, physical structures, and mission-critical assets:

- **Mechanical Design & Drafting:** Autodesk Fusion and AutoCAD. These tools are selected for their robust 3D modeling capabilities, suitability for additive manufacturing (3D printing), and complex assembly management.

- **Electronics Design (EDA):** EasyEDA (Standard and Professional).
  - *Note:* While both versions share a common ecosystem, **EasyEDA Professional** is the preferred standard for final 3D PCB exports due to its superior geometric precision and advanced feature set.

- **Simulation & Analysis:** Ansys. This will be utilized for structural and thermal verification to ensure flight readiness.

  This standard is developed **solely for this project**.

CORE PHILOSOPHY

Our engineering approach is governed by the constraints of a **Safety-Critical** environment and **Time-Sensitive** delivery schedules. Every design choice must reflect the following principles:

- **Defensive Design and Constraints:** Operate under the assumption that components and modules will encounter interference. All tolerances, hole alignments, and mounting interfaces must be explicitly verified and validated within the digital environment before fabrication.

- **Determinism and Complexity Management:** Prioritize predictable fabrication timelines. Designers must maximize internal volume efficiency and simplify installation procedures to reduce the "mean time to repair" or assembly.

- **Visual Uniformity and Execution:** All structural housings, PCB layouts, and mechanical interfaces must exhibit a professional, uniform aesthetic. Design for "Deployment Readiness" means the asset must be functional, robust, and aesthetically compliant with aerospace industry standards.

2 REFERENCED DOCUMENTS

N/A

Under formulation ..

3 GENERAL DESIGN

Under formulation ..

4 EDA STANDARDS (STRICT)

Severity: MANDATORY. Design that is not aligned will be rejected during the review process.

4.1 Schematic
4.2 Pin Configurations
4.3 Protection and Regulation
4.4 Filters
4.5 Output
4.6 Calculations
4.7 PCB Placement and Nets
4.8 PCB Layout and Thickness
4.9 PCB DRC and ERC
4.10 PCB Export

5 CAD STANDARDS (STRICT)

5.1 Dimensions and Constraints
Severity: MANDATORY
Non-compliance: CAD models violating any rule in this section shall be rejected during design review.

5.1.1 External Envelope Specification

All CAD geometry **shall remain within the 2U CubeSat external envelope of 100.0 mm × 100.0 mm × 227.0 mm.**

Rails, panels, fasteners, tolerances **shall not exceed this envelope under any condition**. Note that all units herein are in **mm**.

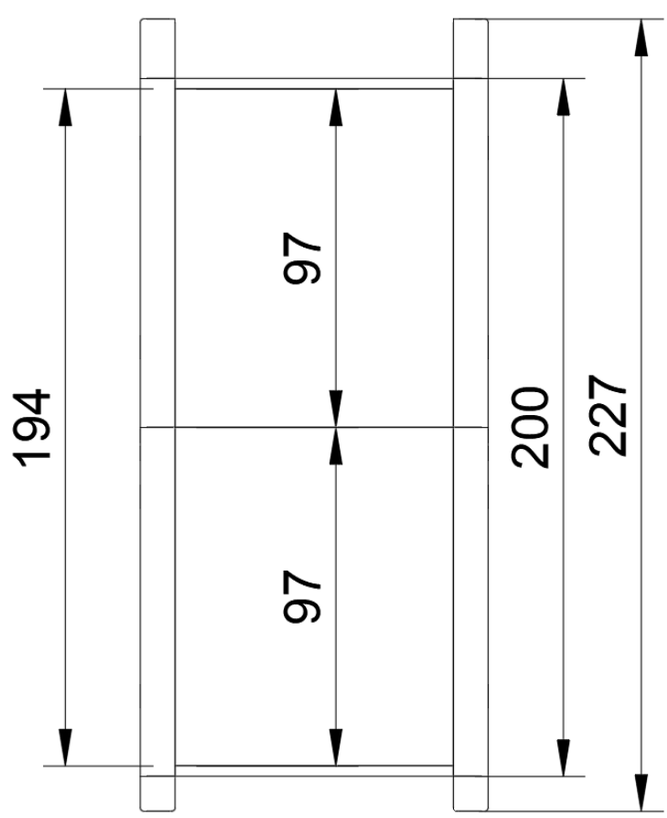

Figure 1. Body Length dims.

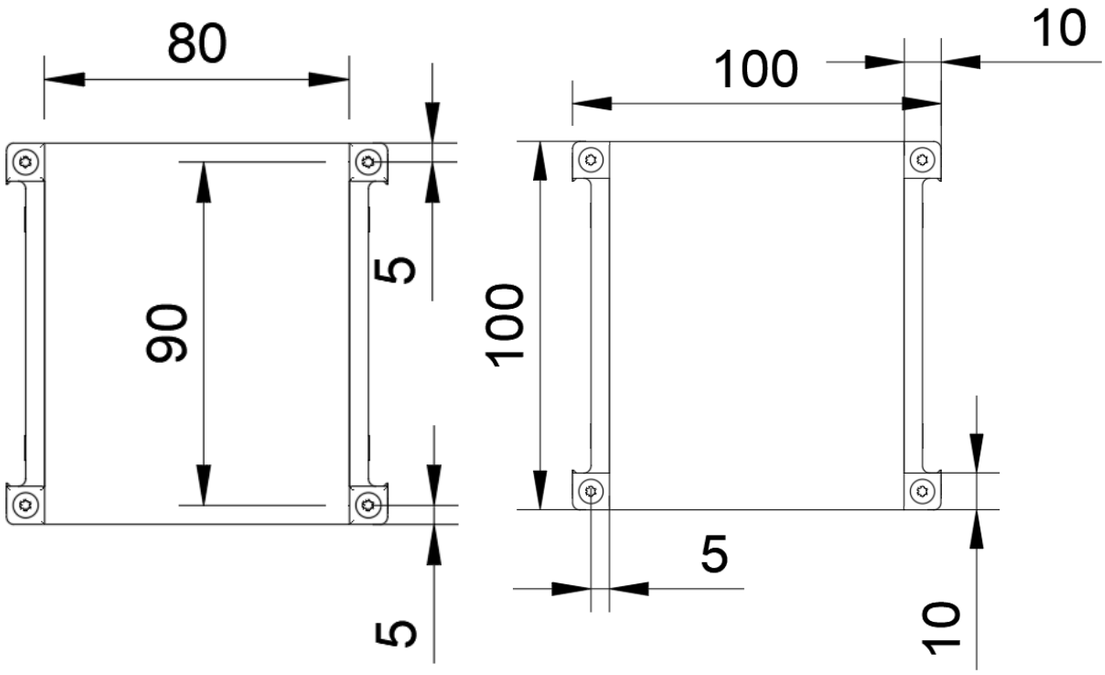

Figure 2 & 3. Top and Bottom View.

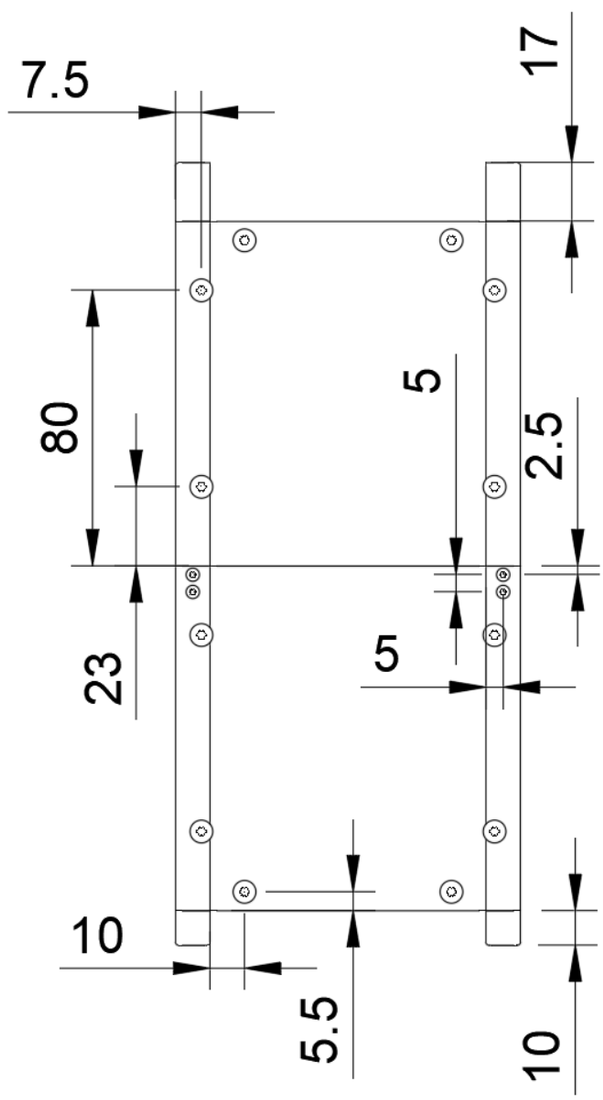

Figure 4. Screw holes and Foots dimensions.

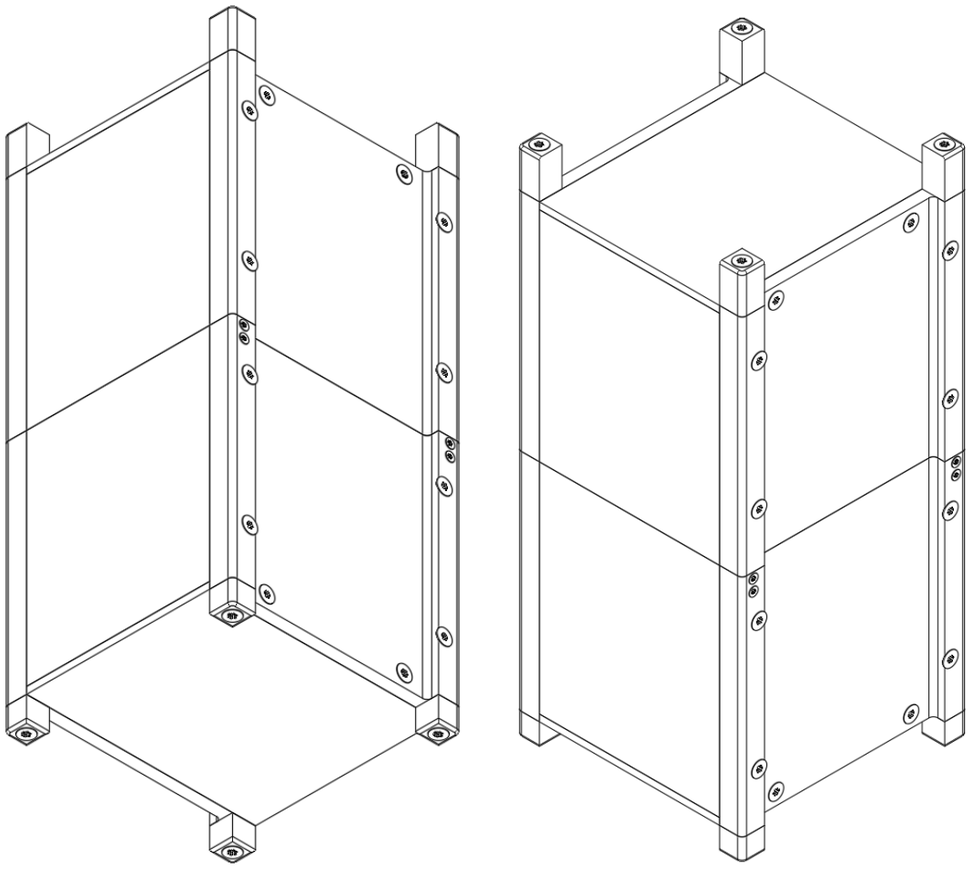

Figure 5 & 6. Orthographic Projection.

5.1.2 Payload Dimension Limits

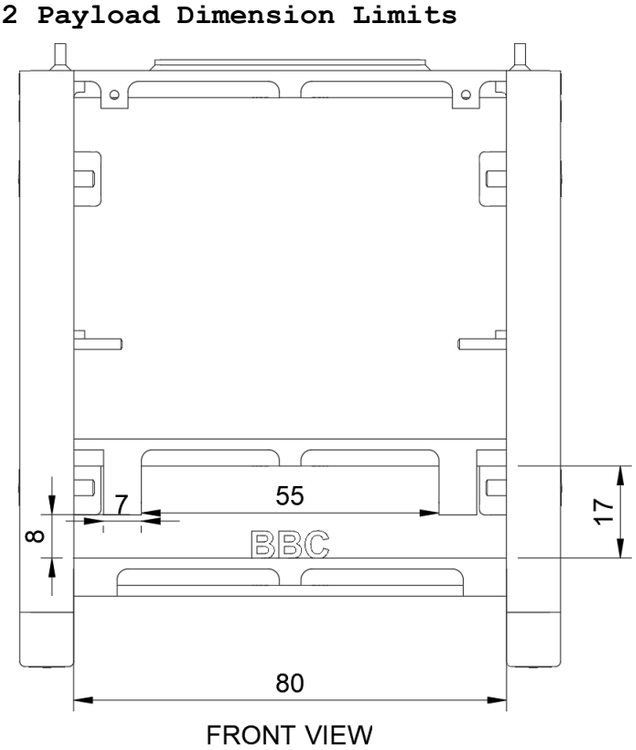

Figure 7.

Space and Area: 80x90x17
Constraints: 7, 8, 55

5.1.3 OBC Dimensions Limits

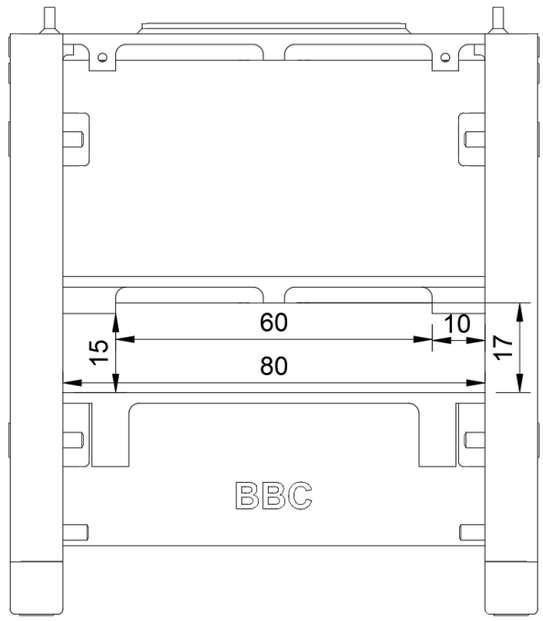

FRONT VIEW
Figure 8.

Space and Area: 80x90x17
Constraints: 10, 15, 60

5.1.4 EPS Dimensions Limits

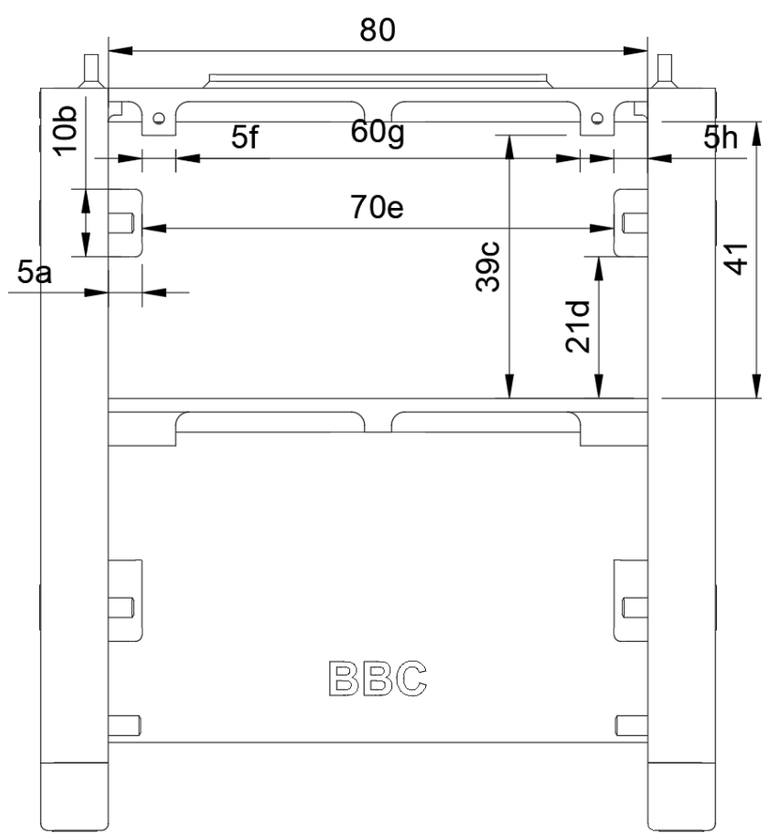

FRONT VIEW

Space and Area: 80x90x41
Constraints (X): 5a, 5f, 5h, 60g, 70e
Constraints (Y): 10b, 39c, 21d

5.1.5 ADCS Dimension Limits

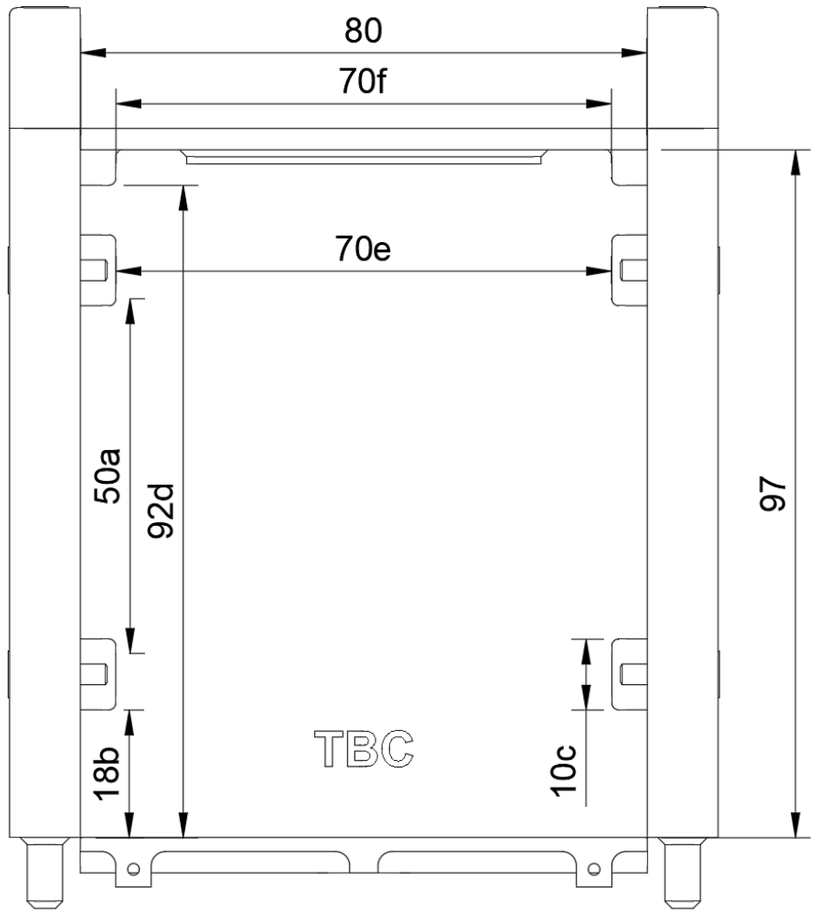

Space and Area: 80x90x97
Constraints (X): 70f, 70e
Constraints (Y): 50a, 18b, 10c, 92d

5.2 Holes and Screws to Use
5.3 Mechanisms and Limitations
5.4 Locations and Placement
5.5 Placement and Installation Procedures
5.6 Component Housing and Protection

Left blank intentionally.

8 CHECKLISTS

END OF DOCUMENT